Pressure switch

»SYNTESI« series

PLUS

Art. No. **144961**

Type No. **5624S204**

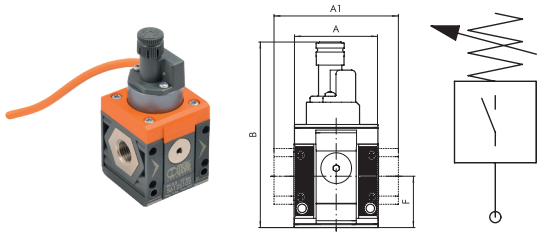

Exemplary illustration

Syntesi pressure switches feature a high degree of miniaturisation and a modern attractive design. As modular components in the Syntesi range, they can be installed either facing up or down.
They come ready assembled with a 2 metre cable or an M8 connector with a 300 mm cable.
The contact is the switching type, which means it can be used as a normally open or normally closed contact.
It can be regulated via a knurled push-lock handle.
On the front and back there is a port (G 1/8 for size 1 and G 1/4 for size 2) that can be used with pressure gauges, pressure switches or as an additional air outlet.

Technical data

Series	Syntesi
Size	2
Function	Changeover
Max. input pressure	13 bar
Adjustment range	0.5 - 10 bar
Temperature range	-10 to 50 °C
Input	G 1/2
Output	G 1/2
Electrical connection	M8 connector on 300mm cable
Protection IP	IP65
Voltage max.	250 V
Max. load	2 A
Hysteresis min. (not adjustable)	0.4 bar
Hysteresis max. (not adjustable)	0.8 bar
Medium	Compressed air or other neutral gases
Housing	Technopolymer
A	60.5 mm
A1	- mm
B	101.0 mm
F	32.5 mm

RIEGLER & Co. KG
Schützenstraße 27
72574 Bad Urach
Tel. +49 7125 9497-642
technik@riegler.de

Subject to technical changes an errors reserved.
The proficiency testing is the responsibility of the user.
12.02.2024 The specified data do not represent legally guaranteed properties.

Commercial data

Customs tariff number	84818099
Country of origin	IT
eCl@ss 5.1.4	27371814
eCl@ss 9.0	27371814
UNSPSC_Code_v190501	39122210
UNSPSC_CodeDesc_v190501	Pressure switch

RIEGLER & Co. KG
Schützenstraße 27
72574 Bad Urach
Tel. +49 7125 9497-642
technik@riegler.de

Subject to technical changes an errors reserved.
The proficiency testing is the responsibility of the user.
12.02.2024 The specified data do not represent legally guaranteed properties.

SYNTESI® PRESSURE SWITCHES

Syntesi® pressure switches feature a high degree of miniaturisation and a modern attractive design.
As they are extremely modular, the Syntesi® series can be installed facing up or down.
They come ready assembled with a 2-metre cable or an M8 connector with a 300-mm cable.
The contact is the switching type, which means it can be normally open or normally closed.
It can be regulated via a knurled push-lock handle.
On the front and back there is a port (1/8″ for size 1 and 1/4″ size 2) that can be used with pressure gauges or as an additional air intake.

TECHNICAL DATA		SY1 PRESSURE SWITCHES			SY2 PRESSURE SWITCHES			
Threaded port		1/8″	1/4″	3/8″	3/8″	1/2″	3/4″	1″
Adjustable pressure interval	bar	0.5 to 10			0.5 to 10			
Hysteresis (not adjustable)	bar	From 0.4 to 0.8 (See diagram)						
Maximum pressure	bar	15			13			
	MPa	1.5			1.3			
	psi	217			188			
Min/Max temperature at 10 bar; 1 MPa; 145 psi	°C	From -10 to 50			From -10 to 50			
Maximum current	A	2			2			
Maximum voltage	V	250			250			
Outside diameter of cable	mm	4.9			4.9			
Number of wires and cross section		3 x 0.5 mm²			3 x 0.5 mm²			
Contacts		Normally-Open (NO) and Normally-Closed (NC)						
Protection		IP65			IP65			
Number of switchings		5 x 10⁶			5 x 10⁶			
Fluid		Filtered lubricated or unlubricated compressed air. Lubrication, if used, must be continuous						
Mounting position		In any position						
Additional air take-off, for pressure gauges or fittings		1/8″, front and rear			1/4″, front and rear			
Additional air take-off flow rate at 6.3 bar	Nl/min	500			1500			
(0.63 MPa; 91 psi) ΔP 1 bar (0.1 MPa; 14 psi)	scfm	18			53			
Wall fixing screws		No. 2 M4 screws			No. 2 M5 screws			
Weight	g	255	250	241	443	416	412	400

COMPONENTS

① Technopolymer adjusting "push lock" handle
② OT58 brass adjusting screw
③ Steel piston spring
④ OT58 brass piston
⑤ Aluminium top plug
⑥ Technopolymer body
⑦ IN/OUT bushing made of OT58 nickel-plated brass or passivated aluminium for 3/4″ - 1″
⑧ Technopolymer bottom plug
⑨ Technopolymer pressure switch body
⑩ Resin finish for IP65
⑪ Electrical contact
⑫ O-ring NBR gasket
⑬ Technopolymer flange

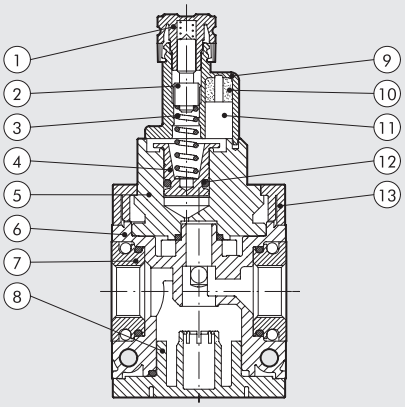

RIEGLER & Co. KG
Schützenstraße 27
72574 Bad Urach
Tel. +49 7125 9497-642
technik@riegler.de

Subject to technical changes an errors reserved.
The proficiency testing is the responsibility of the user.
12.02.2024 The specified data do not represent legally guaranteed properties.

DIMENSIONS

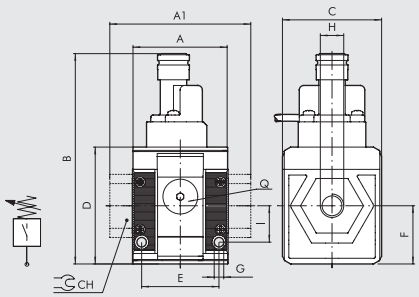

	SIZE 1			SIZE 2			
H (threaded port)	1/8″	1/4″	3/8″	3/8″	1/2″	3/4″	1″
A	42			60.5			
A1	-	-	44	-	-	95	95
B	93			101			
C	44			61			
CH	-			-	-	32	36
D	51.5			70.5			
E	33.5			47.5			
F	25.6			32.5			
G	Hole for M4 screws			Hole for M5 screws			
I	16			22.5			
Q (no. 2 additional air takes-off)	1/8″			1/4″			

HYSTERESIS GRAPH

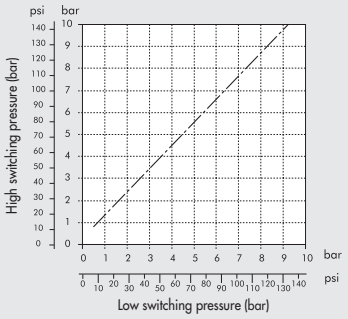

WIRING DIAGRAM

VERSION WITH CABLE

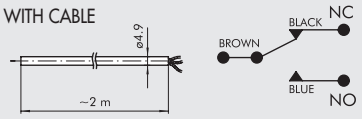

VERSION WITH M8 CONNECTOR

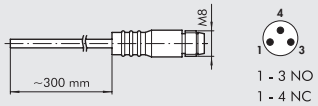

KEY TO CODES

56	1	1	S	10	1
SYNTESI	**SIZE**	**THREADED INPUT CONNECTION**	**ELEMENT**	**TYPE**	**THREADED OUTPUT CONNECTION**
56 Syntesi	**1** Size 1	**0** Without bushing **1** 1/8″ port **2** 1/4″ port **3** 3/8″ port	**S** Pressure switches	**10** 2 m cable **20** 300 mm cable with M8 connector	**0** Without bushing **1** 1/8″ port **2** 1/4″ port **3** 3/8″ port
	2 Size 2	**0** Without bushing **3** 3/8″ port **4** 1/2″ port **5** 3/4″ port **6** 1″ port			**0** Without bushing **3** 3/8″ port **4** 1/2″ port **5** 3/4″ port **6** 1″ port

PURCHASE ORDER CODES HAVING A MORE FREQUENT USE

N.B. Besides the below mentioned codes, you can order elements composed at your will according to the key to codes.

Code	Description
Syntesi® SY1 PRESSURE SWITCHES	
5610S100	Pressure switch 2 m cable SY1 without bushings
5611S101	Pressure switch 2 m cable SY1 1/8
5612S102	Pressure switch 2 m cable SY1 1/4
5613S103	Pressure switch 2 m cable SY1 3/8
5610S200	Pressure switch M8 SY1 connector without bushings
5611S201	Pressure switch M8 connector SY1 1/8
5612S202	Pressure switch M8 connector SY1 1/4
5613S203	Pressure switch M8 connector SY1 3/8

Code	Description
Syntesi® SY2 PRESSURE SWITCHES	
5620S100	Pressure switch 2 m cable SY2 without bushings
5623S103	Pressure switch 2 m cable SY2 3/8
5624S104	Pressure switch 2 m cable SY2 1/2
5625S105	Pressure switch 2 m cable SY2 3/4
5626S106	Pressure switch 2 m cable SY2 1
5620S200	Pressure switch M8 SY2 connector without bushings
5623S203	Pressure switch M8 connector SY2 3/8
5624S204	Pressure switch M8 connector SY2 1/2
5625S205	Pressure switch M8 connector SY2 3/4
5626S206	Pressure switch M8 connector SY2 1

ACCESSOIRES: SECURITY KNOB

Code	Description
9200703	Security knob APR / pressure switch

NOTE: Pull outwards to remove the knob from the pressure switch on the unit. Insert the security knob and regulate the pressure switch. Then press the handle firmly to lock it in position. If the pressure switch needs to be reset, remove the security knob by forcing it laterally with a screwdriver.

RIEGLER & Co. KG
Schützenstraße 27
72574 Bad Urach
Tel. +49 7125 9497-642
technik@riegler.de

Subject to technical changes an errors reserved.
The proficiency testing is the responsibility of the user.
12.02.2024 The specified data do not represent legally guaranteed properties.

GENERAL TECHNICAL DATA SYNTESi®

Syntesi® is an important milestone achieved by Metal Work, the result of thirty years' experience producing air-treatment units. It has been studied in minute detail to obtain the best possible performance in a reduced space and with limited weight. The capacity is much higher than that of other units of the same size.
This modular unit features a very simple yet effective system that requires no brackets, stay bolts or yoke for assembling the elements.
The basic version of Syntesi® incorporates numerous functions that are not provided or are only optional with traditional units. Examples are padlockable knobs, additional pneumatic ports on the front and back, flow options from left to right or vice versa, regulators with compensation system - which are accurate even when the upstream pressure changes, with rapid downstream pressure relief - full indelible marking, automatic condensate drain even in size 1, and 360° visual inspection of oil and condensate levels. The basic materials, technopolymer and nickel-plated brass have excellent corrosion resistance. An anti-corrosion version is available with stainless steel components (screws, plates) or Geomet®-reated ones (regulator springs).

TECHNICAL DATA		SIZE 1			SIZE 2			
Threaded port		1/8"	1/4"	3/8"	3/8"	1/2"	3/4"	1"
Max. input pressure	bar	15			13			
	MPa	1.5			1.3			
	psi	217			188			
Flow rate		See catalogue of the various elements						
Min/max temperature at 10 bar; 1 MPa; 145 psi	°C	from -10 to +50			from -10 to +50			
Padlockable knob		The knobs of the regulators, filter regulators and standard sectioning valves can all be padlocked						
Fluid		Compressed air or other inert gases						
Mounting position		See catalogue of the various elements						
Direction of flow		Flow options right to left or vice versa						
Additional air take-off, for pressure gauges or fittings		1/8", front and rear, on all modules			1/4", front and rear, on all modules			
Wall fixing screws		No. 2 M4 screws			No. 2 M5 screws			
Certification for potentially explosive atmosphere according to Atex 2014/34/EU rule		Ex II 3G Ex h IIC T5 Gc -10°C < Ta < 50°C II 3D Ex h IIIC T100 °C Dc						

ANTI-CORROSION VERSION

Differences compared to the standard version:
- stainless steel screws
- stainless steel plate for R, FR, V3V knobs
- Geomet®-treated regulator spring and filter-regulator

RIEGLER & Co. KG
Schützenstraße 27
72574 Bad Urach
Tel. +49 7125 9497-642
technik@riegler.de

Subject to technical changes an errors reserved.
The proficiency testing is the responsibility of the user.
12.02.2024 The specified data do not represent legally guaranteed properties.

FIXING TO FRONT PORTS

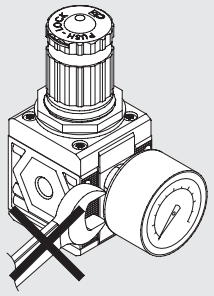

Do not use a spanner for fixing taper threaded elements to the front ports. Mount by hand and apply a liquid sealant (not teflon®).

ROTARY BUSHINGS

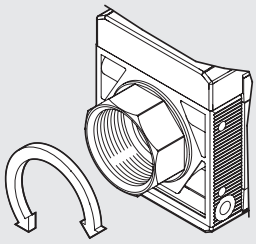

3/4″ and 1″ bushings in Size 2 rotate freely to facilitate assembly operations.

LASER MARKING

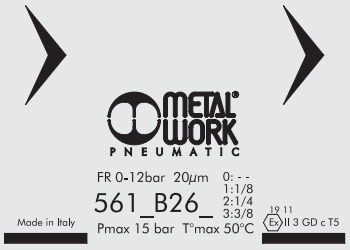

The following is marked indelibly on the body:
- Metal Work trademark
- Code
- Maximum pressure and temperature
- Degree of filtration or pressure range, where relevant
- Week and year of manufacture
- Atex category
- Made in Italy

MOUNTING OPTIONS

On the wall, using two screws

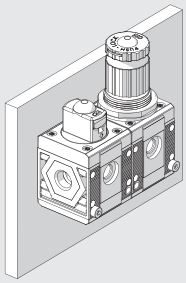

On a panel

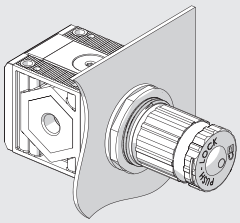

Using knob bracket

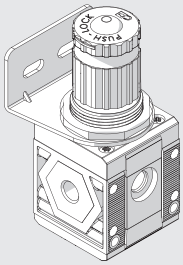

Using a bracket

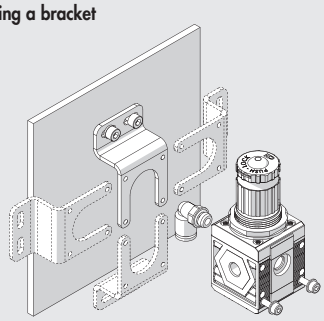

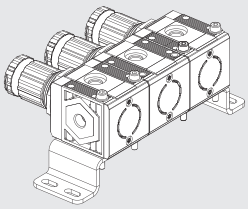

The bracket can be secured in any position, and the fittings can be mounted on the pressure gauge air intake at the back of the unit.

On a DIN EN50022 bar with the apposite adaptator

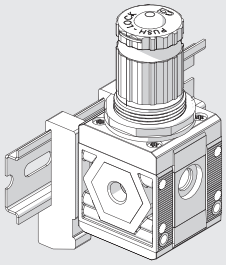

RIEGLER & Co. KG
Schützenstraße 27
72574 Bad Urach
Tel. +49 7125 9497-642
technik@riegler.de

Subject to technical changes an errors reserved.
The proficiency testing is the responsibility of the user.
12.02.2024 The specified data do not represent legally guaranteed properties.

MODULARITY AND FLEXIBILITY

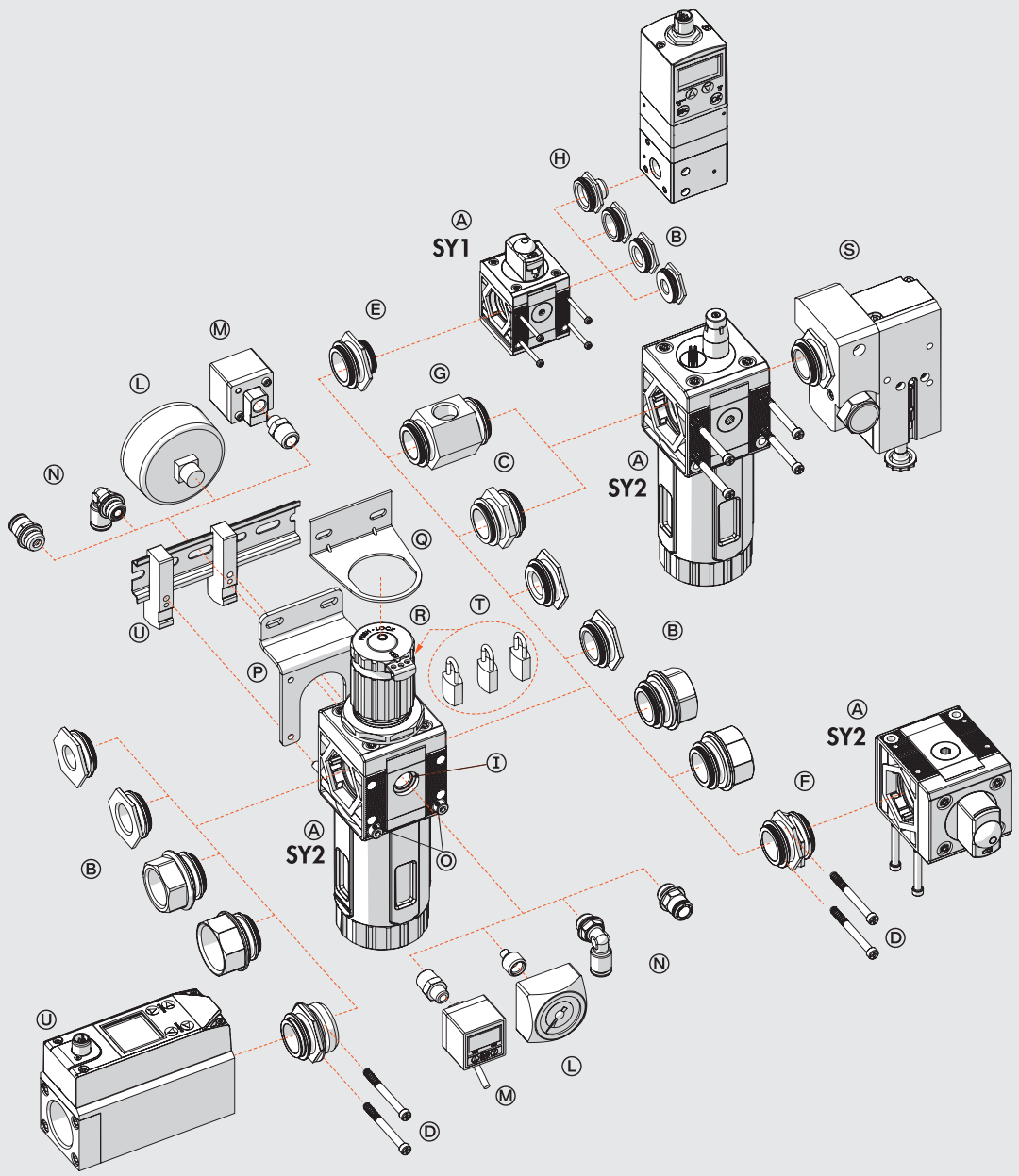

RIEGLER & Co. KG
Schützenstraße 27
72574 Bad Urach
Tel. +49 7125 9497-642
technik@riegler.de

Subject to technical changes an errors reserved.
The proficiency testing is the responsibility of the user.
12.02.2024 The specified data do not represent legally guaranteed properties.

The various elements of Syntesi® Ⓐ can be connected to the air feed and delivery circuit using pneumatic nickel brass or passivated aluminium ports Ⓑ and can be fixed together using nipples Ⓒ.
The nipples and ports are easy to remove by unscrewing the two front screws Ⓓ. This solution has numerous advantages:
- Reduced overall dimensions.
- Free composition of multiple elements, without the need for brackets, stay bolts or yoke.
- The threads for the fittings are metallic, allowing high tightening torques, also for tapered threads.
- Maximum flexibility: a unit can be transformed at any time by adding an element or replacing a port with another one, e.g. 1/4" instead of 1/8".
- The air intake port can be the same or different from the outlet port, as desired.

Standard Syntesi® ports are: 1/8", 1/4", 3/8" for size 1; 3/8", 1/2", 3/4", 1" for size 2.
It may be necessary to use a vice to insert the bushes into size 2.
The nipples have different functions:
- Nipple Ⓒ joins two elements of the same size together.
- Size adaptor Ⓔ can be used to connect an element in the Syntesi® 2 series with one in the Syntesi® 1 series.
- The 90° adaptor Ⓕ can be used to connect two 90° angled elements. For example, it can help directing the regulator knob or the control knob of a sectioning valve towards the user.
- The two-way air intake Ⓖ is a simple and cost-effective system which, besides connecting two elements together, has 2 opposing threaded air intakes.
- The adaptor for Regtronic Ⓗ can be used to fix the Regtronic 1/4" proportional valve to a Syntesi® size 1 element.

Additional ports Ⓘ. On the front and back of ALL Syntesi® elements there is a port (1/8" for size 1, 1/4" for size 2) that can be used for pressure gauges Ⓛ, pressure switches Ⓜ or, given the high flow rate, as additional air take-off Ⓝ. These ports are downstream of the element, so, for example, a regulator port can supply air at a set pressure or a filter port can supply filtered air (not valid for activated carbon filter and depurator).
Wall fixing. Only two through screws Ⓞ are needed. No bulky brackets or additional flanges are required. The bracket Ⓟ can be used to separate the unit from the fixing wall, e.g. to mount a fitting to the rear port.
Fixing on a DIN EN50022 bar. Can be done using the bracket kit Ⓤ.
Regulator fixing bracket Ⓠ. Regulators and filter-regulators can also be fixed using a steel bracket Ⓠ that embraces the bell.
Padlockable knob Ⓡ. The knobs of regulators, filter-regulator and sectioning valves can all be padlocked. The steel plate is included in the supply.
You can insert up to two 3 mm diameter padlocks Ⓣ on size 1 and three padlocks on size 2. As an alternative, the sectioning valve can have a steel plate suitable for a single 6 mm diameter padlock.
Safety valve Ⓢ. The unit can incorporate a series 70 SAFE AIR® safety valve.
Flowmeter series FLUX 1-2 Ⓤ. The unit can incorporate a series FLUX 1 or FLUX 2 flow meter.

RIEGLER & Co. KG
Schützenstraße 27
72574 Bad Urach
Tel. +49 7125 9497-642
technik@riegler.de

Subject to technical changes an errors reserved.
The proficiency testing is the responsibility of the user.
12.02.2024 The specified data do not represent legally guaranteed properties.

SYNTESI® KEY TO CODES

KEY TO CODES SINGLE ELEMENT

56	1	1	F	10	1
SYNTESI	**SIZE**	**THREADED INPUT CONNECTION**	**ELEMENT**	**TYPE**	**THREADED OUTPUT CONNECTION**
56 Syntesi **5X** Syntesi anti-corrosion	**1** Size 1 **2** Size 2	**0** Without bushing **1** 1/8″ port **2** 1/4″ port **3** 3/8″ port **0** Without bushing **3** 3/8″ port **4** 1/2″ port **5** 3/4″ port **6** 1″ port	**F** Filter **D** Depurator **C** Active carbon filter **R** Pressure regulator **B** Filter-regulator **L** Lubricator ● **V** Shut off valve ▲ **A** Progressive starter ▲ **S** Pressure switches **P** Air take-off	Varies from element to element	**0** Without bushing **1** 1/8″ port **2** 1/4″ port **3** 3/8″ port **0** Without bushing **3** 3/8″ port **4** 1/2″ port **5** 3/4″ port **6** 1″ port

● The anti-corrosion version of this element is only available with manual actuation.
▲ Not available in the anti-corrosion version.

KEY TO CODES UNIT COMPOSED OF TWO OR THREE ELEMENTS

56	1	1	V	10	B	24	L	10	1
SYNTESI	**SIZE**	**THREADED INPUT CONNECTION**	**ELEMENT 1**	**TYPE**	**ELEMENT 2**	**TYPE**	**ELEMENT 3**	**TYPE**	**THREADED OUTPUT CONNECTION**
56 Syntesi **5X** Syntesi anti-corrosion	**1** Size 1 **2** Size 2	**1** 1/8″ port **2** 1/4″ port **3** 3/8″ port **3** 3/8″ port **4** 1/2″ port **5** 3/4″ port **6** 1″ port	**F** Filter **D** Depurator **C** Active carbon filter **R** Pressure regulator **B** Filter-regulator **L** Lubricator ● **V** Shut off valve ▲ **A** Progressive starter ▲ **S** Pressure switches **P** Air Take-off	Varies from element to element	**F** Filter **D** Depurator **C** Active carbon filter **R** Pressure regulator **B** Filter-regulator **L** Lubricator ● **V** Shut off valve ▲ **A** Progressive starter ▲ **S** Pressure switches **P** Air Take-off	Varies from element to element	**F** Filter **D** Depurator **C** Active carbon filter **R** Pressure regulator **B** Filter-regulator **L** Lubricator ● **V** Shut off valve ▲ **A** Progressive starter ▲ **S** Pressure switches **P** Air Take-of	Varies from element to element	**1** 1/8″ port **2** 1/4″ port **3** 3/8″ port **3** 3/8″ port **4** 1/2″ port **5** 3/4″ port **6** 1″ port

● The anti-corrosion version of this element is only available with manual actuation.
▲ Not available in the anti-corrosion version.

RIEGLER & Co. KG
Schützenstraße 27
72574 Bad Urach
Tel. +49 7125 9497-642
technik@riegler.de

Subject to technical changes an errors reserved.
The proficiency testing is the responsibility of the user.
12.02.2024 The specified data do not represent legally guaranteed properties.

Accessories

	Art. No.	Type No.
Mounting bracket, size 2, standard and anti-corr.	145659	9200717X
Adapter for DIN rail, size 1 and size 2	145660	9200718X
M8 socket, 3-pole, 1 m cable, High Flex CL6	145497	02400A0100
M8 socket, 3-pole, 2,5 m cable, High Flex CL6	145498	02400A0250
M8 socket, 3-pole, 5 m cable, High Flex CL6	145499	02400A0500
M8 socket, 3-pole, 10 m cable, High Flex CL6	145500	02400A1000
Anti-tampering handle	145559	9200703

Spareparts

	Art. No.	Type No.
Threaded port bushing, size 2, G 1/2	144692	9210012

RIEGLER & Co. KG
Schützenstraße 27
72574 Bad Urach
Tel. +49 7125 9497-642
technik@riegler.de

Subject to technical changes an errors reserved.
The proficiency testing is the responsibility of the user.
12.02.2024 The specified data do not represent legally guaranteed properties.